PSEUDU

Näennäis stereo

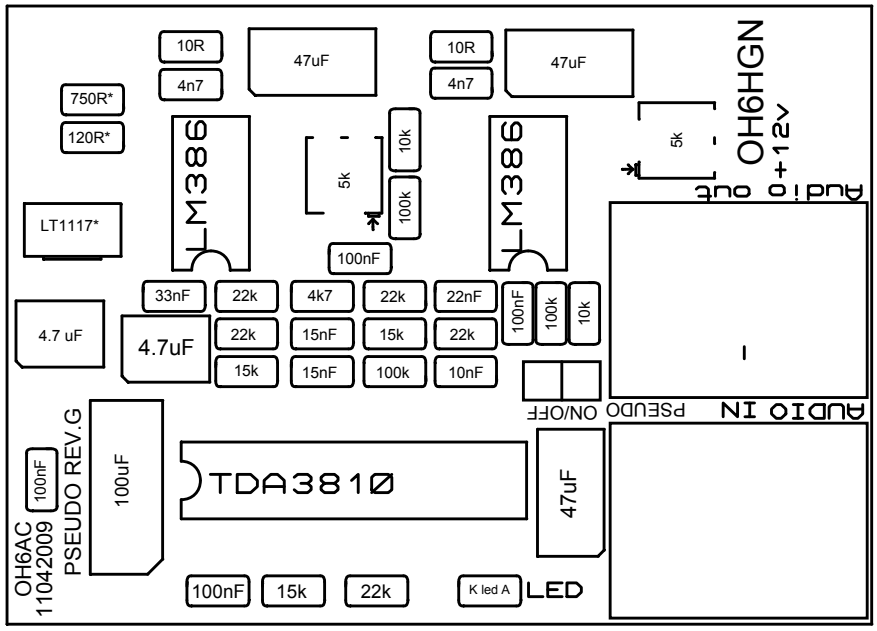

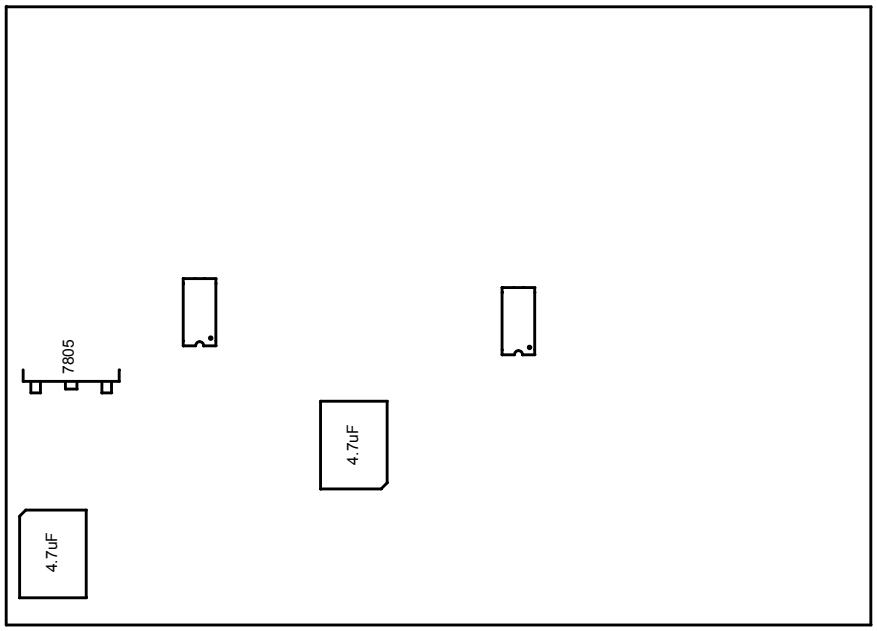

PSEUDO REV.G Lokeron osat. 12.7.2009 OH6HGN

3x15 KΩ 1x4k7	5x22 KΩ	3x100 KΩ	1x22nF	4x100nF 1x7805 reku
2x4n7	1x10nF	2x 15 nF	2x10Ω	1x33nF 1xLED

Vastukset 750R* ja 120R* silloin kun käytetään LT1117* Rekua

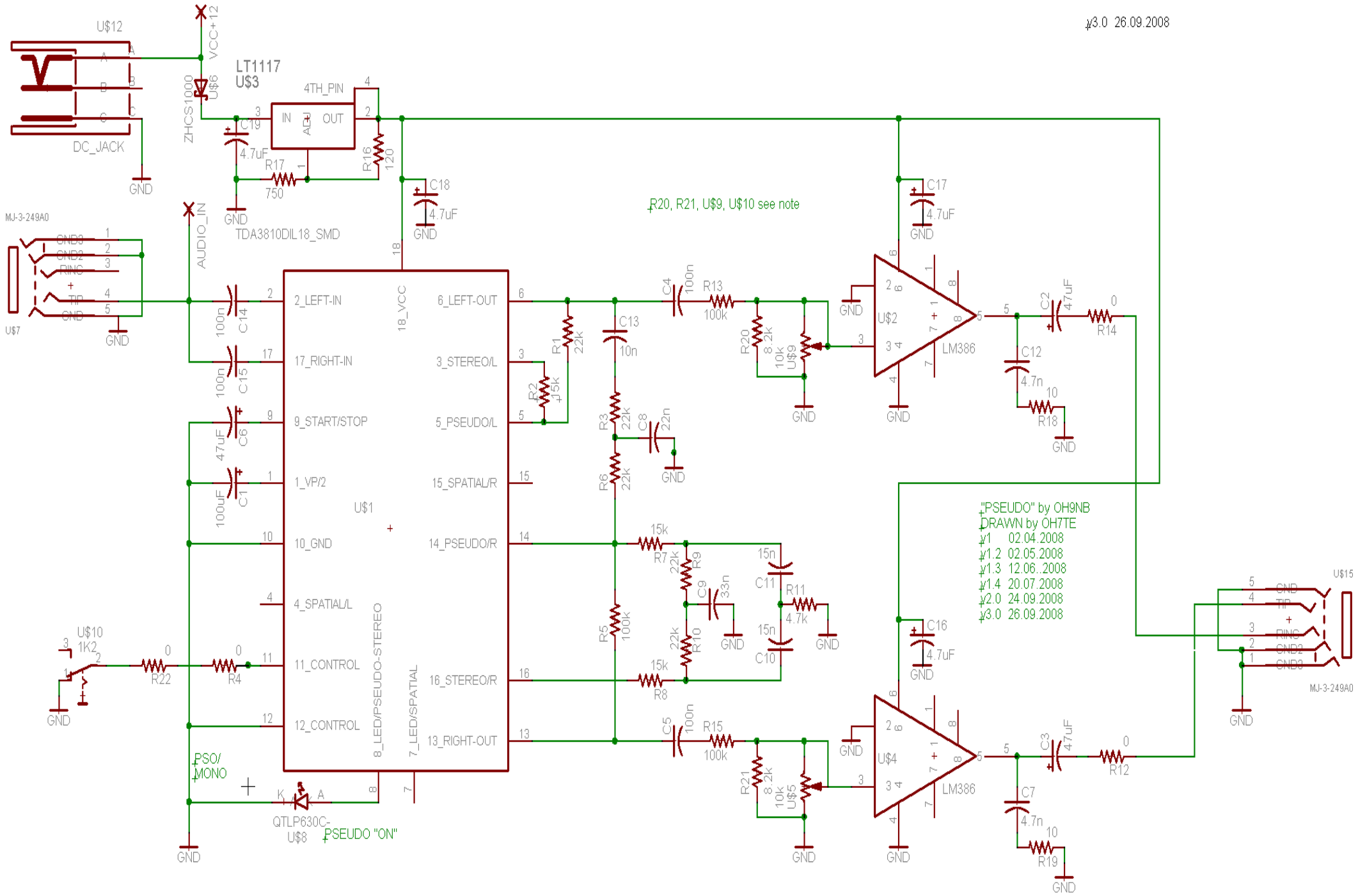
v3.0 26.09.2008
U$12
DC_JACK
VCC+12
ZHCS1000
U$6
LT1117
U$3
4TH_PIN
IN
OUT
ADJ
C19
4.7uF
R17
750
R16
120
C18
4.7uF
GND
TDA3810DIL18_SMD
MJ-3-249A0
U$7
AUDIO_IN
R20, R21, U$9, U$10 see note
2_LEFT-IN
17_RIGHT-IN
9_START/STOP
1_VP/2
10_GND
4_SPATIAL/L
11_CONTROL
12_CONTROL
18_VCC
6_LEFT-OUT
3_STEREO/L
5_PSEUDO/L
15_SPATIAL/R
14_PSEUDO/R
16_STEREO/R
13_RIGHT-OUT
8_LED/PSEUDO-STEREO
7_LED/SPATIAL
U$1
C14
100n
C15
100n
C6
47uF
C1
100uF
U$10
1K2
R22
R4
PSO/
MONO
QTLP630C-
U$8
PSEUDO "ON"
R1
22k
R2
15k
R3
22k
R6
22k
R5
100k
C13
10n
C8
22n
R7
15k
R9
22k
C9
33n
R10
22k
R8
15k
C11
15n
C10
15n
R11
4.7k
C4
100n
R13
100k
R20
8.2k
10k
U$9
C5
100n
R15
100k
R21
8.2k
10k
U$5
C17
4.7uF
U$2
LM386
C2
47uF
R14
0
C12
4.7n
R18
10
C16
4.7uF
U$4
LM386
C3
47uF
R12
0
C7
4.7n
R19
10
"PSEUDO" by OH9NB
DRAWN by OH7TE
v1 02.04.2008
v1.2 02.05.2008
v1.3 12.06..2008
v1.4 20.07.2008
v2.0 24.09.2008
v3.0 26.09.2008
U$15
MJ-3-249A0